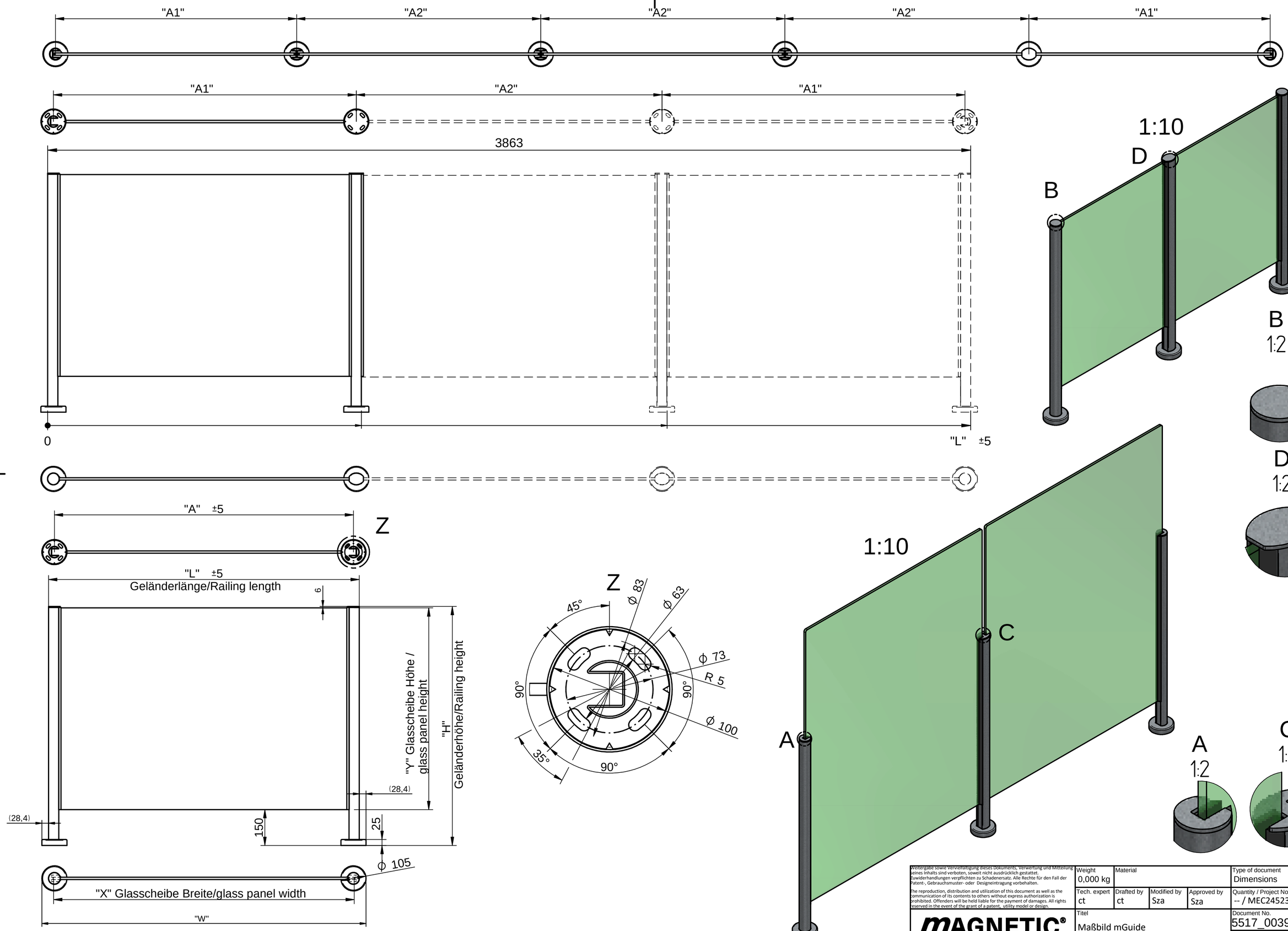

Weitergabe sowie Vervielfältigung dieses Dokuments, Verwertung und Mitteilung seines Inhalts sind verboten, soweit nicht ausdrücklich gestattet. Zuwiderhandlungen verpflichten zu Schadenersatz. Alle Rechte für den Fall der Patent-, Gebrauchsmuster- oder Designeintragung vorbehalten.

The reproduction, distribution and utilization of this document as well as the communication of its contents to others without express authorization is prohibited. Offenders will be held liable for the payment of damages. All rights reserved in the event of the grant of a patent, utility model or design.

Weight 0,000 kg	Material			Type of document Dimensions	
Tech. expert ct	Drafted by ct	Modified by Sza	Approved by Sza	Quantity / Project No. / Date -- / MEC24523 / 22.04.24	
MAGNETIC® ACCESS TO PROGRESS	Titel Maßbild mGuide dimensional drawing mGuide			Document No. 5517_0039	Revision 05
				Issue date 30.05.2018	Page 1/2

A2 / 1:10

Geländerlänge "L" Railing length "L"	Geländerhöhe "H" railing height "H"	Pfostenabstand "A1" post distance "A1"	Pfostenabstand "A2" post distance "A2"	Glasscheibe glass panel	Glasscheibe (Breite x Höhe) glass panel (width x height)	Benennung Name
1300mm	1000mm	1252mm	-	2016_0189	1258 x 844	Glasscheibe mGuide 1300 VSG glass panel mGuide 1300 LSG
1300mm	1000mm	1252mm	-	2016_0216	1258 x 844	Glasscheibe mGuide 1300 ESG glass panel mGuide 1300 TSG
1300mm	1200mm	1252mm	-	2016_0235	1258 x 1050	Glasscheibe mGuide standard H1200 ESG glass panel mGuide standard H1200 TSG
1300mm	1200mm	1252mm	-	2016_0237	1258 x 1050	Glasscheibe mGuide standard H1200 VSG glass panel mGuide standard H1200 LSG
1300mm	1500mm	1252mm	-	2016_0214	1258 x 1350	Glasscheibe mGuide standard H1500 ESG glass panel mGuide standard H1500 TSG
1300mm	1500mm	1252mm	-	2016_0231	1258 x 1350	Glasscheibe mGuide standard H1500 VSG glass panel mGuide standard H1500 LSG
1300mm	1800mm	1252mm	-	2016_0226	1258 x 1650	Glasscheibe mGuide standard H1800 ESG glass panel mGuide standard H1800 TSG
1300mm	1800mm	1252mm	-	2016_0230	1258 x 1650	Glasscheibe mGuide standard H1800 VSG glass panel mGuide standard H1800 LSG
2110mm	1553mm	1055mm	1055mm	2016_0208	1044,3 x 1403	Glasscheibe mGuide BM Secunet Polen ESG glass panel mGuide BM Secunet Polen TSG
2110mm	1553mm	1055mm	1055mm	2016_0236	1044,3 x 1403	Glasscheibe mGuide BM Secunet Polen VSG glass panel mGuide BM Secunet Polen LSG
gemäß Autrag according to order	Maximal 1800	-	-	2016_0217	gemäß Autrag according to order	Glasscheibe mGuide sonder ESG glass panel mGuide special TSG
gemäß Autrag according to order	Maximal 1800	-	-	2016_0234	gemäß Autrag according to order	Glasscheibe mGuide sonder VSG glass panel mGuide special LSG

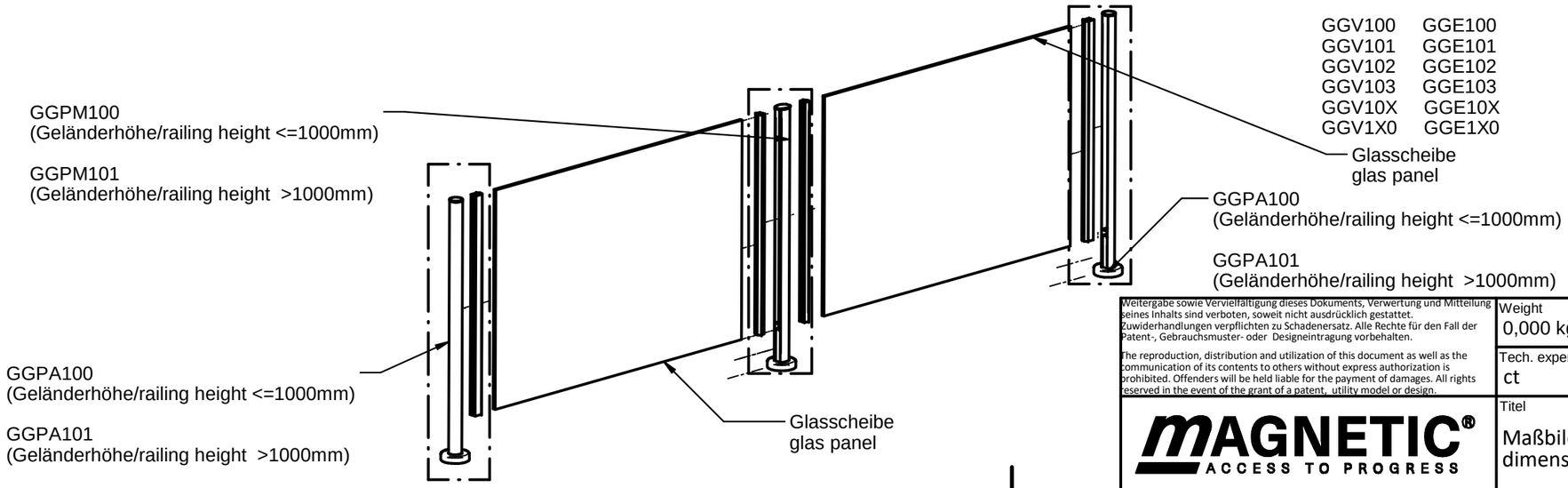

Weitergabe sowie Vervielfältigung dieses Dokuments, Verwertung und Mitteilung seines Inhalts sind verboten, soweit nicht ausdrücklich gestattet. Zuwiderhandlungen verpflichten zu Schadenersatz. Alle Rechte für den Fall der Patent-, Gebrauchsmuster- oder Designeintragung vorbehalten.

The reproduction, distribution and utilization of this document as well as the communication of its contents to others without express authorization is prohibited. Offenders will be held liable for the payment of damages. All rights reserved in the event of the grant of a patent, utility model or design.

MAGNETIC® ACCESS TO PROGRESS

Weight	Material			Type of document
0,000 kg				Dimensions
Tech. expert	Drafted by	Modified by	Approved by	Quantity / Project No. / Date
ct	ct	Sza	Sza	-- / MEC24523 / 22.04.24

Titel
Maßbild mGuide
dimensional drawing mGuide

Document No.	Revision
5517_0039	05
Issue date	Page
30.05.2018	2/2

A3 / 1:10